NAME :SHEIKH WASIMUDDIN
BRANCH: CSE IOT
ROLL NO. :73
REG. NO. : 23071044

Practical - 03

Aim	Design a sketch to monitor state of switch by establishing the serial communication between Arduino UNO and Computer.
Software used	Arduino UNO IDE
Hardware used	1. Arduino UNO
Components required	1. Arduino UNO 2. Jumper wires 3. Led's 4. Resistor 5. Breadboard
Circuit diagram	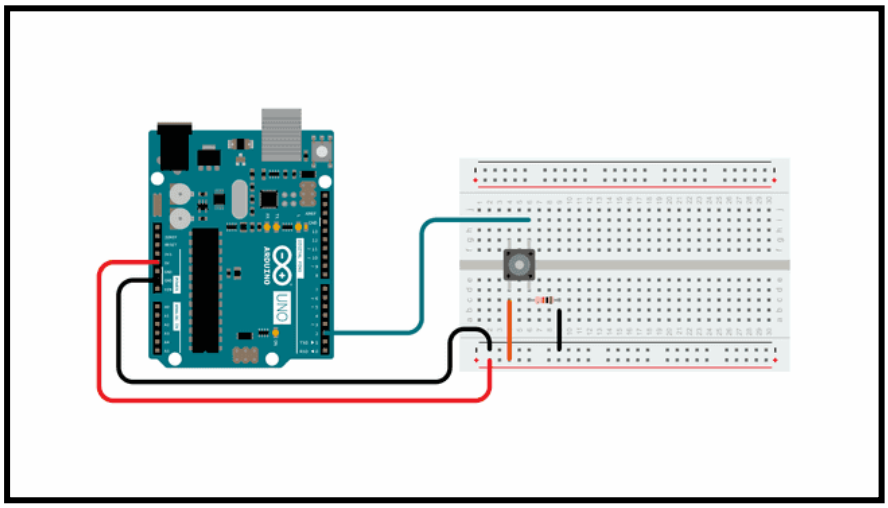

Theory	**1. What is Serial Communication?**
	• **Definition:** Serial communication is a method of transmitting data one bit at a time, sequentially, over a single wire or a pair of wires. This contrasts with parallel communication, where multiple bits are transmitted simultaneously over multiple wires.
	• **How it Works:** In the Arduino's case, when you use Serial.print() or Serial.println(), the Arduino converts the data (numbers, characters, etc.) into a stream of binary bits (0s and 1s). These bits are then sent one after another over the serial connection.
	• **Advantages:**
	  ○ Simplicity: Requires fewer wires than parallel communication.
	  ○ Long-distance transmission: Can be used for relatively long-distance data transfer.
	  ○ Widely used: A common communication method for microcontrollers and other devices.
	  ○

NAME :SHEIKH WASIMUDDIN
BRANCH: CSE IOT
ROLL NO. :73
REG. NO. : 23071044

	2. What Connection Are We Actually Doing?
	• **Physical Connection:** In the Arduino UNO, serial communication with a computer typically occurs through the USB port. However, internally, the USB connection is converted to a serial connection.
	• **TX and RX Pins:** The Arduino has dedicated pins for serial communication:
	  ○ TX (Transmit): Sends data from the Arduino.
	  ○ RX (Receive): Receives data by the Arduino.
	
	• **USB-to-Serial Converter:** The Arduino UNO has a built-in USB-to-serial converter chip (often an ATMega16U2) that translates the serial data (TX and RX) into USB signals that the computer can understand.
	• **Virtual COM Port:** When you connect the Arduino to your computer via USB, the computer recognizes it as a virtual COM port. This allows software (like the Arduino IDE's Serial Monitor) to communicate with the Arduino as if it were a physical serial port.
	• **Data Flow:** When the arduino sends data, it sends it through the TX pin, the USB to serial converter, then through the usb cable to the computer. the computer then reads that data from the virtual COM port. When the computer sends data to the arduino, that data goes through the USB cable, through the usb to serial converter, and then to the arduino's RX pin.
	
	3. What is Baud Rate?
	• **Definition:** Baud rate is a measure of the number of signal changes per second in a serial communication channel. It effectively determines the speed at which data is transmitted.
	• **Bits per Second (bps):** In most cases, the baud rate is equivalent to the bits per second (bps). So, a baud rate of 9600 means that 9600 bits are transmitted per second.
	• **Synchronization:** The baud rate must be the same on both the sending and receiving devices for successful communication. If the baud rates don't match, the receiving device will interpret the data incorrectly, resulting in garbled or nonsensical output.
	• **Arduino and Serial Monitor:** In your Arduino code, Serial.begin(9600) sets the Arduino's serial communication to 9600 baud. In the Arduino IDE's Serial Monitor, you must also select 9600 baud to ensure proper communication.
	• **Common Baud Rates:** Common baud rates include 9600, 115200, 57600, and 38400. Higher baud rates allow for faster data transfer, but they may be more susceptible to errors over long distances or in noisy environments.

Code	int pushButton = 2;
	void setup() {
	  Serial.begin(9600);
	  pinMode(pushButton, INPUT);
	}
	void loop() {
	  int buttonState = digitalRead(pushButton);
	  Serial.println(buttonState);
	  delay(1);
	}

Output	

NAME :SHEIKH WASIMUDDIN
BRANCH: CSE IOT
ROLL NO. :73
REG. NO. : 23071044

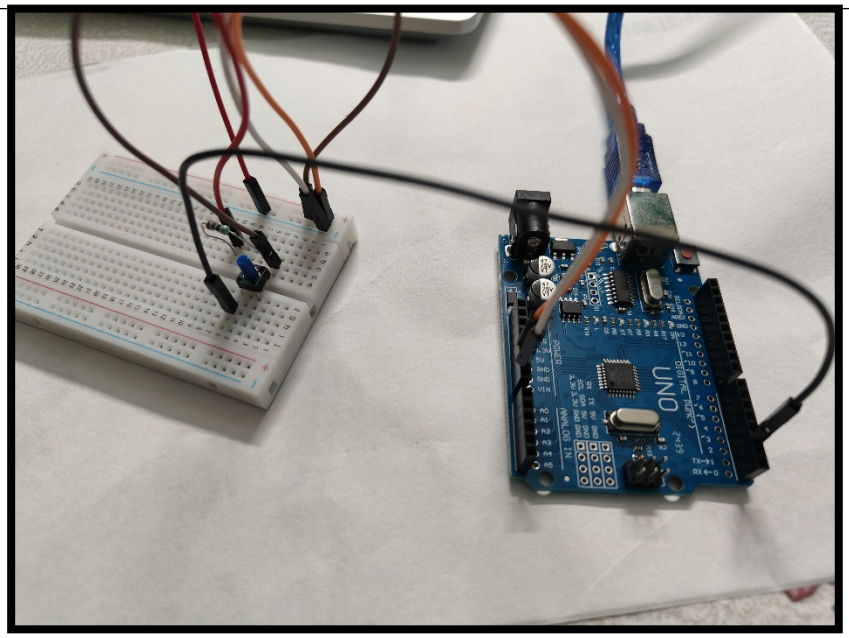

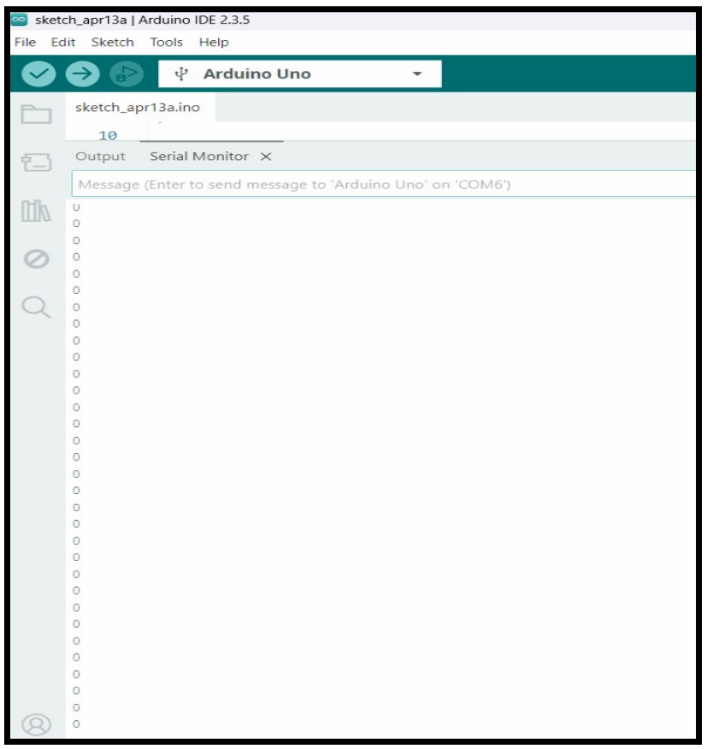

NAME :SHEIKH WASIMUDDIN
BRANCH: CSE IOT
ROLL NO. :73
REG. NO. : 23071044

	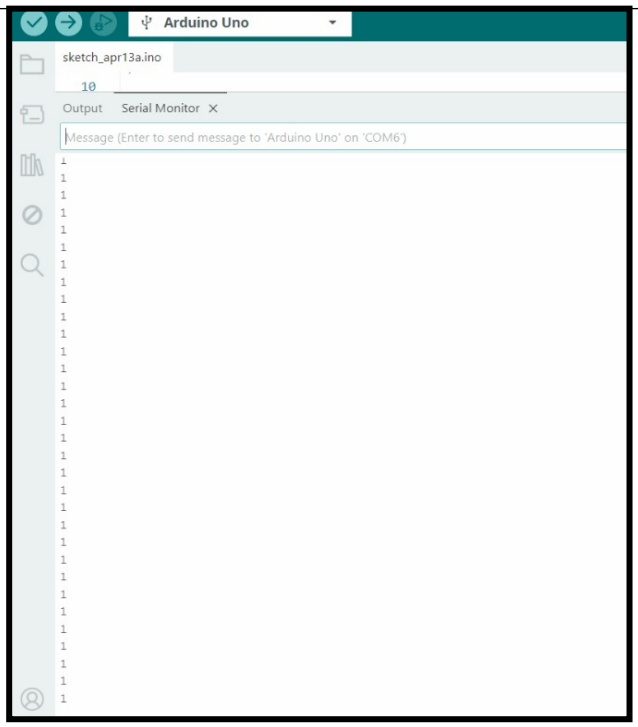
Conclusion	Design a sketch to monitor state of switch by establishing the serial communication between Arduino UNO and Computer executed successfully.